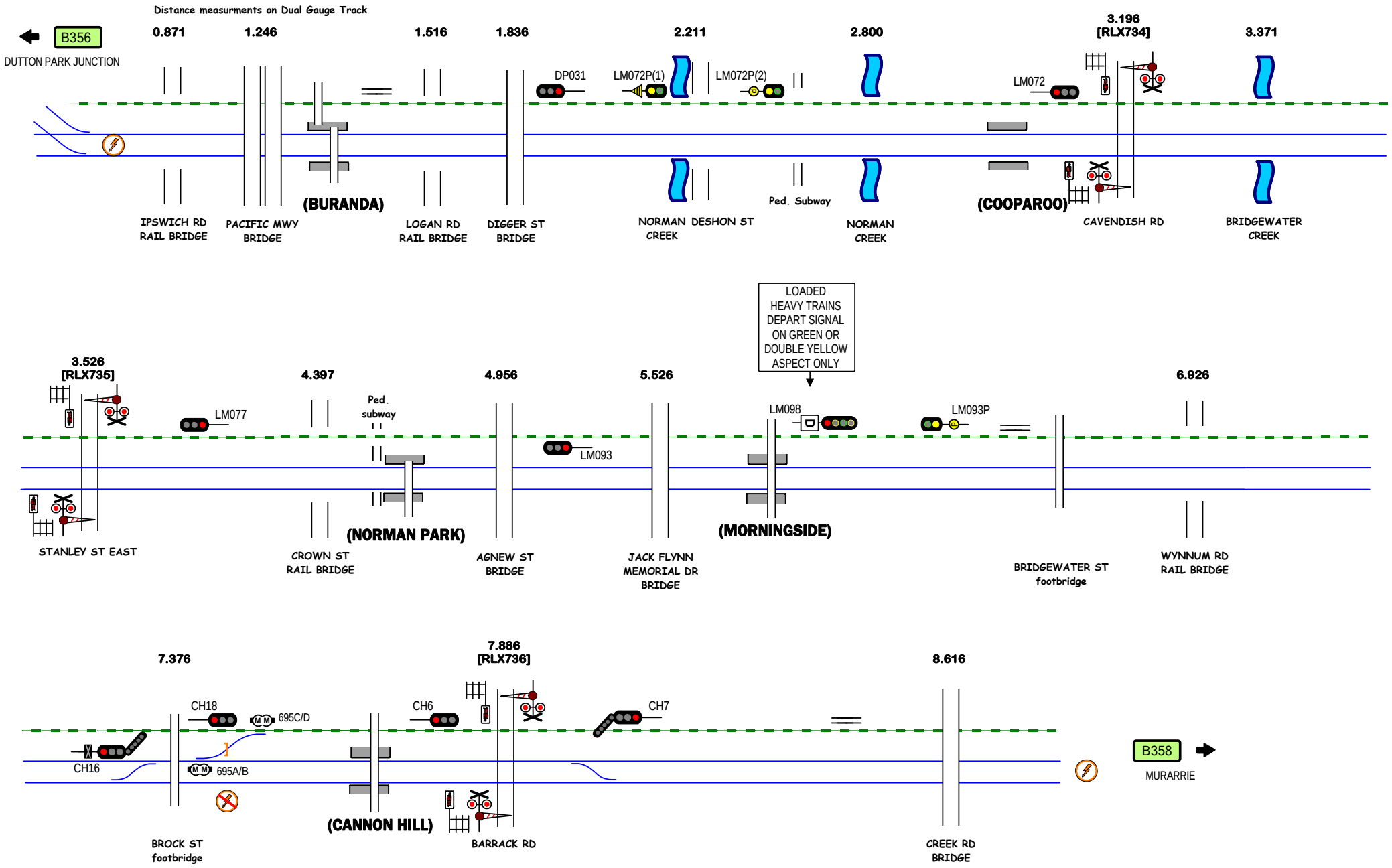

DUTTON PARK JUNCTION - CANNON HILL

Signal Locations

Home Support

© 2011G F Vincent