ROAD LENGTHS (m.)

1 North	677
2 North	676
3 North	787
4 North	967
5 North	1109
6A North	266
6B North	368
6C North	321
7A North	305
7B North	306
7C North	315

8A North	307
8B North	362
8C North	266
9A North	345
9B North	304
9C North	235
10A North	345
10B North	304
10C North	183
Loco Store	334
Wagon Mtc	339

STENCIL INDICATORS

119	[T1][1]
125	[6][T2]
139]	[LS][N]
]	[T1][ ]
148	[<][T1]
153	[N][T2]
154	[T2][>]
157	[>][T2]
160	[T2][N]
163	[T1][>]
164	[N][T1]

182	[T1][LS]
194	[3][T1]
196]	[3][1]
]	[2][ ]
208	[4][T1]
210]	[8][6]
]	[7][5]
216	[10][9]
218	[5][T1]
221	[DM][T1]

All motorised points (except 333A) are trailable.

E End of signalled authority

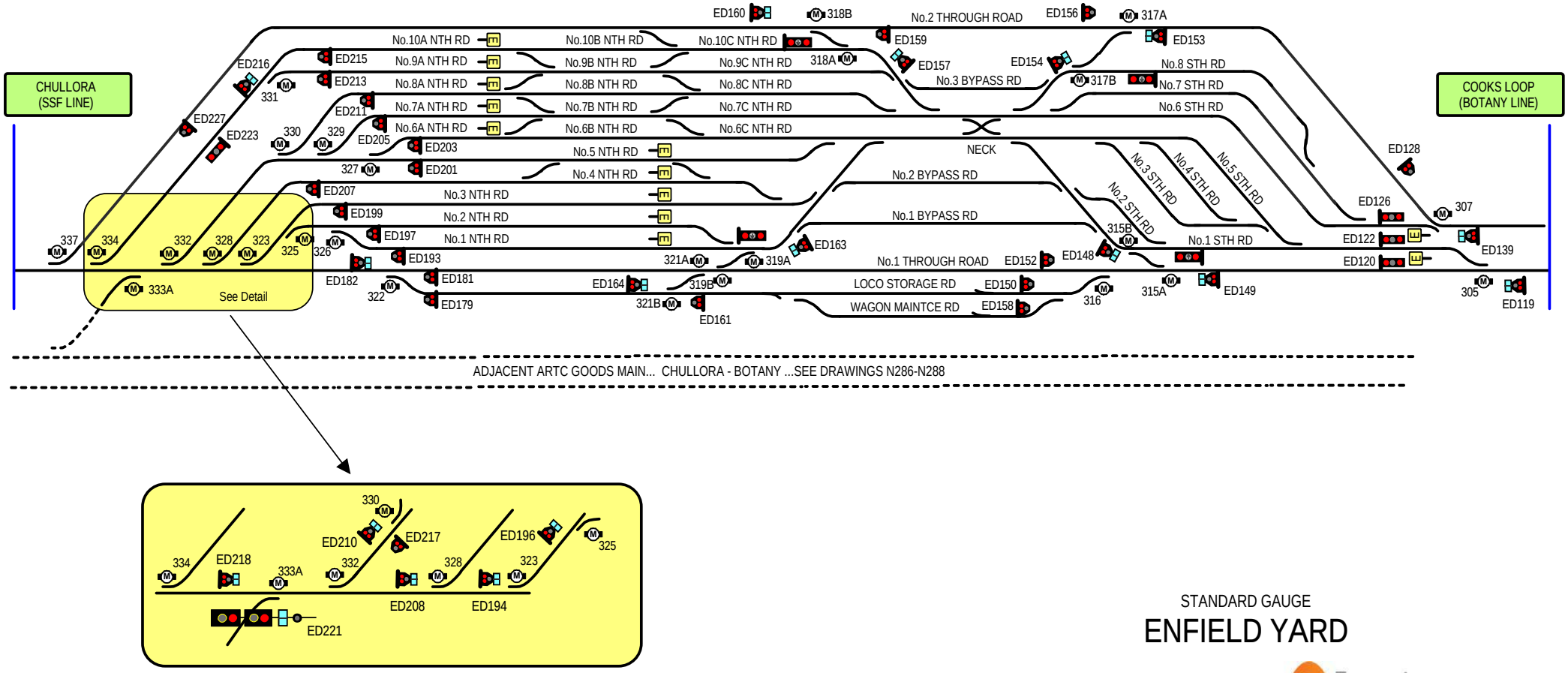

STANDARD GAUGE

ENFIELD YARD

Transport Sydney Trains

Home

© 2016 G F Vincent

N248